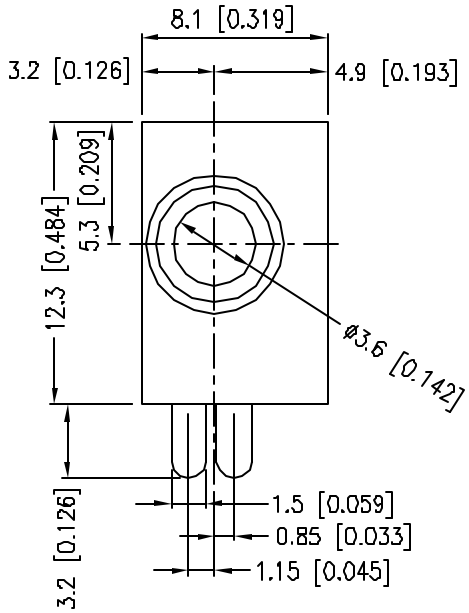

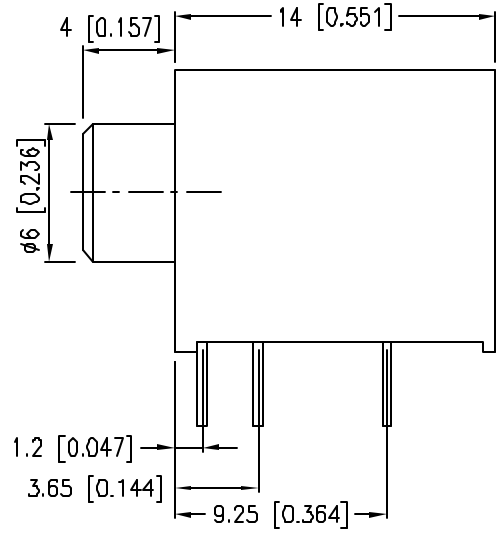

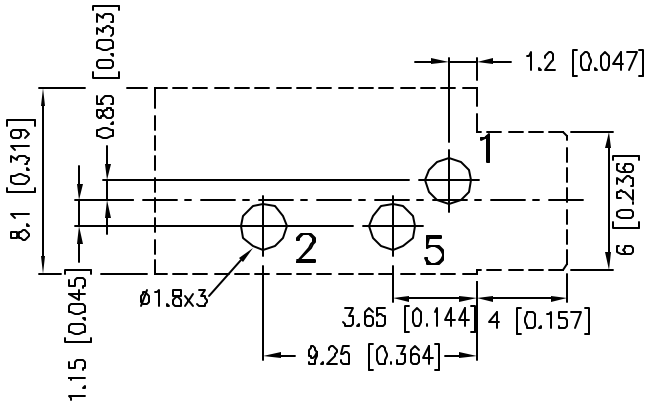

HOLE LAYOUT
(TOP VIEW)

SCHEMATIC

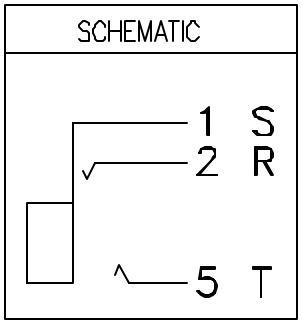

SPECIFICATIONS:
RATING: 12V DC @ 1A
CONTACT RESISTANCE:
30 mOHMS MAX
INSULATION RESISTANCE:
100 MOHMS MIN @ 500V DC
WITHSTAND VOLTAGE:
500V AC FOR 1 MINUTE
LIFE: 5,000 CYCLES

CUI INC
9615 SW Allen, Suite 103
Beaverton, OR 97005
Phone: (503) 643-4899
800-275-4899
Fax: (503) 372-1266
Website: www.cui.com

TITLE: 3.5mm AUDIO JACK-STEREO

PART NO.	UNITS:
SJ-3533NG	MM [INCHES]

DRAWN BY:	APPROVED BY:	SCALE:
		3X

PC FILE NAME: SJ3533NG.DWG

COPYRIGHT 1997 BY CUI INC.