P1

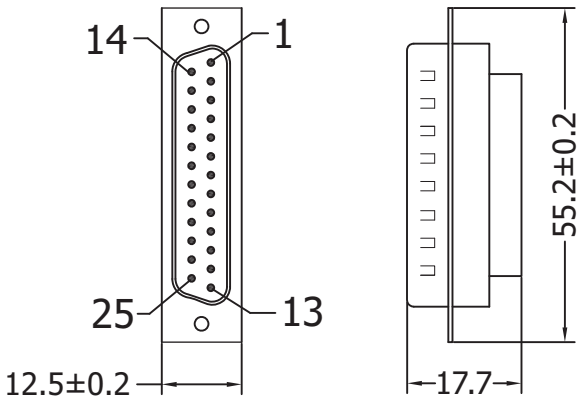

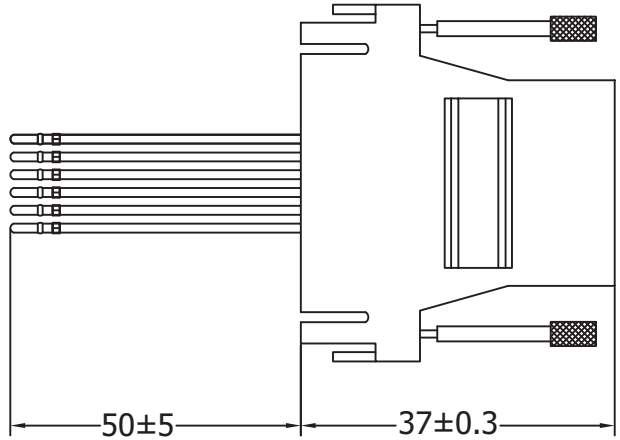

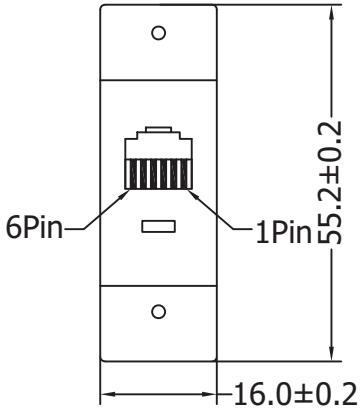

P2

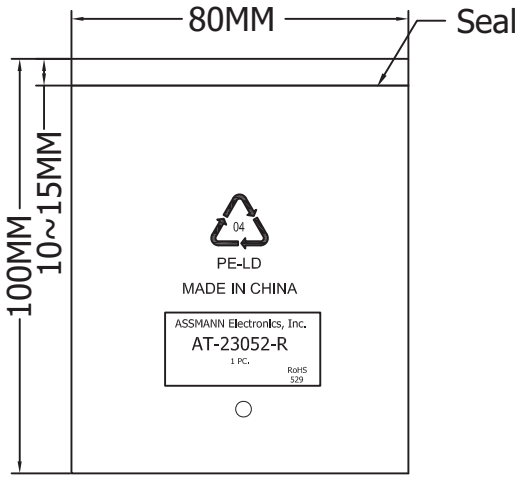

1PCS/PE Bag

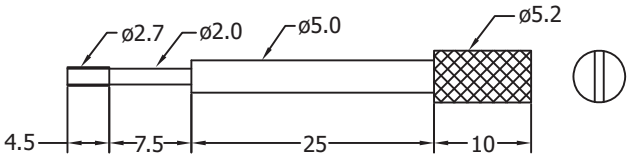

Pin Assignment

P1	P2
White	1
Black	2
Red	3
Green	4
Yellow	5
Blue	6

Material:

- Cable: UL 26AWG, 60MM
  - Blue, Black, Red, Green, Yellow, White
- P1 Connector: D-Sub 25-Pin Male
  - Crimp Type
  - Black Insulation
- P2 Connector: RJ12 6P6C Female 3μ"
- Color: Beige
- PVC Housing
- Thumbscrew: 5*37MM

RoHS Complaint

Scale	1:1						Name
TOLERANCE					Drawn	11.22.11	Chappell
X.X	±0.40				Approved		
X.XX	±0.25						
X.XXX	±0.15						
Angle	±3°						
			Modification	Date	Name		

ASSMANN WSW components

Item No. **AT-23052-R**

Title D-Siub Modular Adapter, 25 Pin Male <=> RJ12 Female, Beige

Drawing No. **rev00**

Replace | Sheet